HEP/EW-50-4/H-B-T-D

High-efficiency wall-mounted axial fans fitted with E.C. Technology motors

Fibreglass reinforced plastic rotors.

Fan:
- Motor-rotor air flow direction.
- Fibreglass-reinforced polyamide-6 rotors.
- Sheet metal support base.
- Anti-contact protective grille pursuant to standard UNE-EN ISO 12499.
- Electronic variable speed drive (VSD). single-phase or three-phase. supplied with fan.

Motor:
- New high-effici ency (IE4) synchronous EC motors. Fitted with high intensity neodymium magnets.
- Compact motors to facilitate air flow passage.
- High reliability sensorless control. no maintenance required.
- Fitted with durable ball bearings.
- IP65 protection.
- Fan operating temperature: -25ºC +60ºC.

Electronic variable speed drive:
- Adjustable speed by 0-10 V signal or automatic PI control built into variable speed drive.
- Electronic variable speed drive highly configurable with 2 analogue inputs. 2 digital outputs. 1 relay output and a choice of 1 analogue or 1 digital output.
- Possibility of connection to MODBUS and CAN Open field buses.
- Electronic variable speed drive easy to install outside the operating zone thanks to its DIN rail it can be mounted in control blocks. thus minimising connections.
- Supplied pre-wired with shielded cable in accordance with the EMC 2014/30/ EU directive.
- Available with single-phase 220-240 V 50/60 Hz (VSD1/B type) or three-phase 380-415 V 50/60 Hz (VSD3/B type) inputs. Standard IP20 protection. IP66 protection on request.
- VSD operating temperature: -25ºC +50ºC.

Finish:
- Anticorrosive finish of polyester resin polymerised at 190ºC. previously degreased with phosphate-free nanotechnological treatment.

On request:
- Motor. rotor and grille unit (version F).
- Rotor motor unit (version G).
- Motor-rotor air flow direction.

CURBA CARACTERISTICA LA 1,2KG/M³

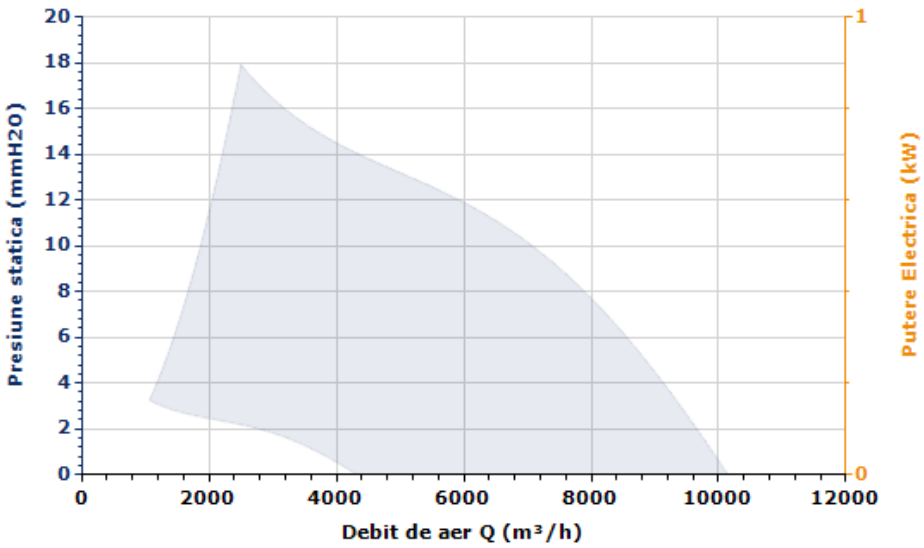

Punctul de Proiectare

Q (m³/h)	
Ps (mmH2O)	

Punctul de Funtionare (PF)

Q (m³/h)	
Ps (mmH2O)	
Pd (mmH2O)	
Pt (mmH2O)	
Rotor (rpm)	
Temp. Max. (ºC)	
Viteza de refulare a aerului (m/s)	
Putere Electrica (kW)	

CARACTERISTICI TEHNICE

Debit de aer maxim (m³/h)	10160
Viteza (rpm)	1410
Greutate aprox. (kg)	15

ERP

Randament	47,3%
Gradul de randament N	55,8
Categoria de masurare	A
Categoria de randament	Static
Raportul specific	1,00
Debit (m³/h)	5994

Presiune (Pa)	117
Putere electrica (kW)	0,457
Viteza (rpm)	1410
Convertizor de frecventa	VSD incorporat in ventilator
ErP compliance	2015

DATELE MOTORULUI

Puterea electrica maxima (kW)	0,66
Hz/faze	50/3
Motor VSD Max. (rpm)	1410
Motor VSD Min. (rpm)	600
Curent maxim (A) 380-415 V	1,37
Protectia motorului	IP65
Marimea ramei motorului	125

Datele se pot schimba, va rugam sa verificati placuta motorului

ACCESORII DISPONIBILE

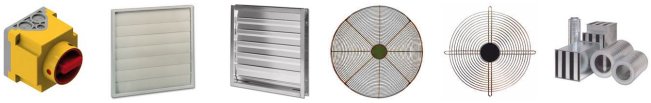

INT PL P RI RT S

Trebuie verificat daca accesoriul este potrivit pentru modelul de ventilator

DIMENSIUNI

A	B	C	D	F	G	H	J	K	L
665	562	516,5	514	302	11	115	10,5	640	M.8
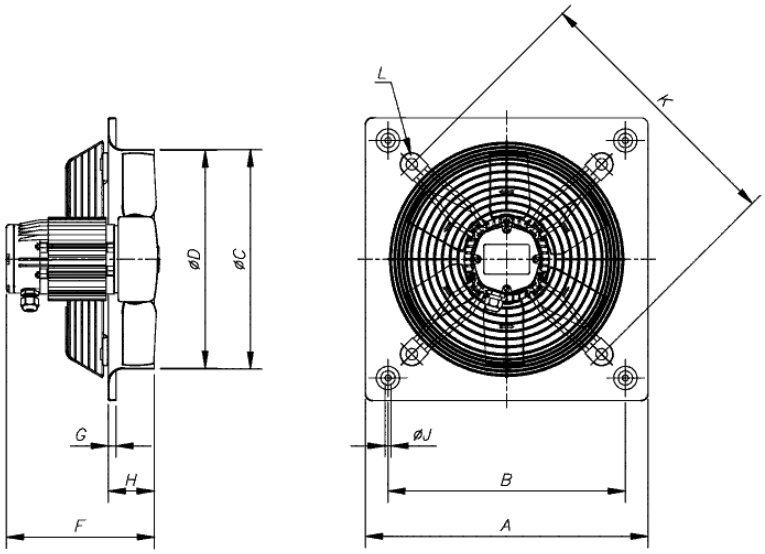
Dimensiunile fara unitati definite explicit sunt exprimate in milimetri (mm). Dimensiunile în funcție de motor sunt aproximative